CEILING SUSPENDED

STANDARD / COMPACT INVERTER (R32)

UV18F N10 / UV24F N10 / UV30F N10

(Unit : mm)

	Part Name
1	Air Inlet
2	Air Outlet
3	Remote Controller Signal Receiver
4	Drain Hose Routing Hole
5	Refrigerant Pipe and Cable Routing Hole
6	Gas Pipe Connection
7	Liquid Pipe Connection

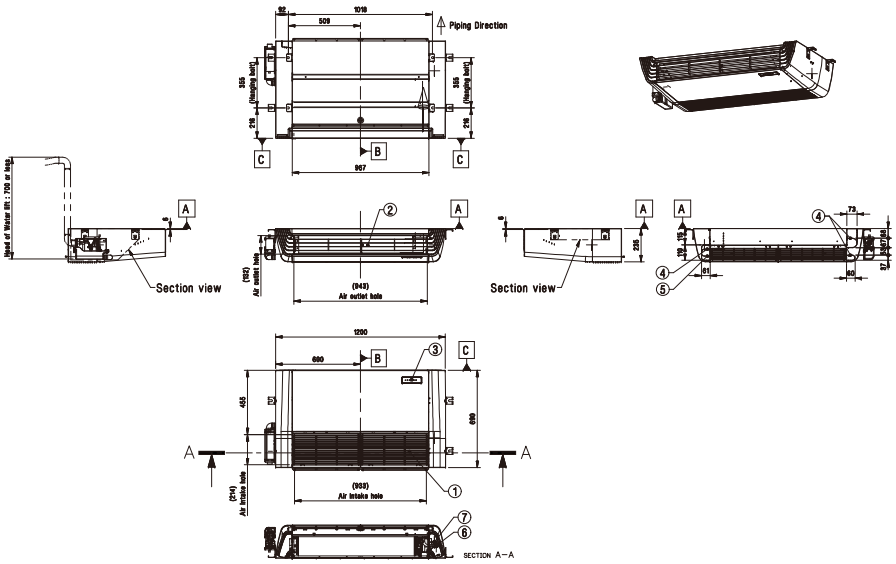

CEILING SUSPENDED

STANDARD INVERTER (R32)

UV36F N20 / UV42F N20 / UV48F N20 / UV60F N20

(Unit : mm)
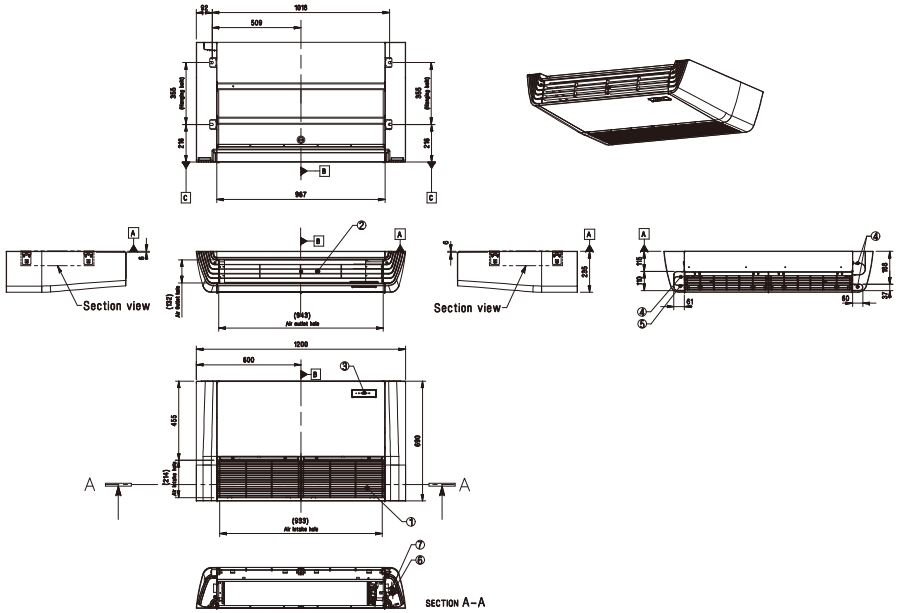
	Part Name
1	Air Inlet
2	Air Outlet
3	Remote Controller Signal Receiver
4	Drain Hose Routing Hole
5	Refrigerant Pipe and Cable Routing Hole
6	Gas Pipe Connection
7	Liquid Pipe Connection